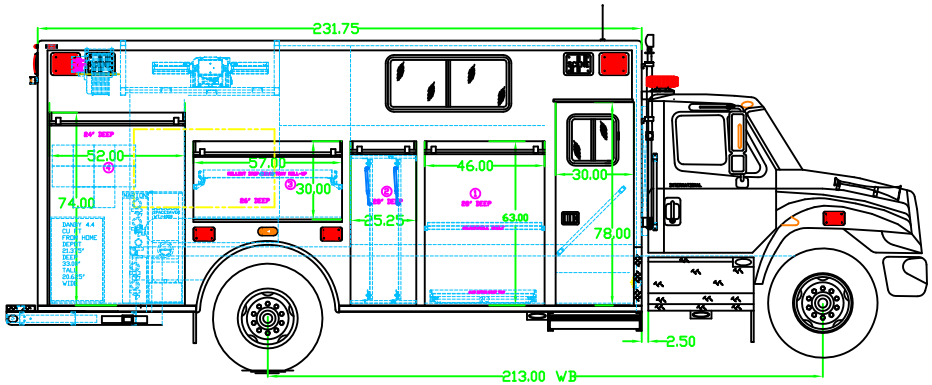

CURBSIDE VIEW

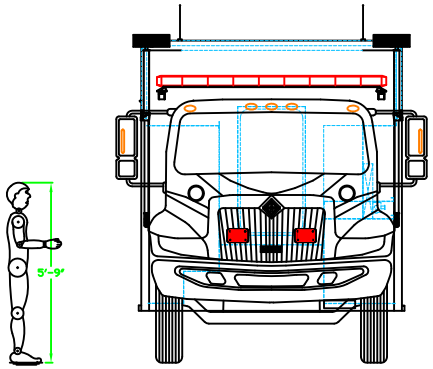

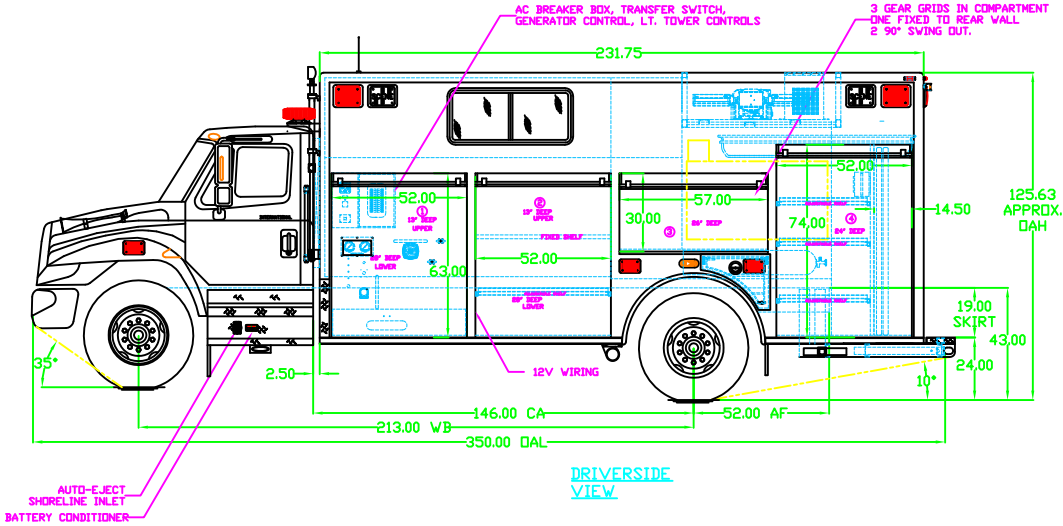

DRIVERSIDE VIEW

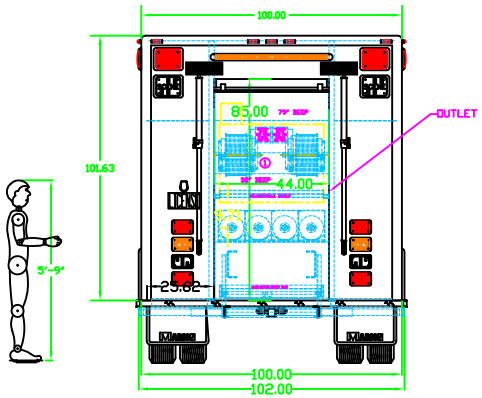

REAR VIEW

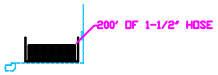

COMPARTMENT R.S. 1 HOSE LAYOUT.

MAXIMUM OVERALL LENGTH NOT LISTED (33-49-1000)
MAXIMUM OVERALL HEIGHT NOT LISTED (33-49-2000)

29476 MBV JOB NUMBER
SHANE KRUEGER PROJECT ADMINISTRATOR

LTR	DATE	BY	DESCRIPTION
C	11/30/09	BJS	UPDATED AS BUILT
B	11/30/09	BJS	UPDATED PER SALES
A	10/7/09	BJS	UPDATED PER SUBMITTAL

MARION RESERVES THE RIGHT TO MAKE MINOR DIMENSIONAL CHANGES AND DESIGN AND COMPONENT CHANGES FOR PRODUCT IMPROVEMENT

CHASSIS SPECS
CHASSIS: INTERNATIONAL
MODEL: 4400 4x2
VIN: 213846

MARION

MARION BODY WORKS, INC.
P.O. BOX 500
MARION WISCONSIN 54950-0500
715/754-5261 FAX 715/754-5776

TITLE: 2010 DEMO FUSION
FOR: FIRESTORM FUSION MBV
DRAWN BY: BJS
APPROVED BY:
DATE: 9/14/09
SCALE: 1/20
DRG. NO. 98033830
SHEET 1 OF 2